操作手册

SAM

2.2KW　5.5KW

108

TEL/FAX:021-57350280/021-51368588
http://www.hanbell.com.cn

SHANGHAI HANBELL PRECISE MACHINERY CO.,LTD.　E-mail:hanbell-sales@hanbell.cn

-
-
- 12 12

Thank you for using Hanbell products.

All Hanbell products are through quality and performance control tests prior to delivery. However, the guaranty period for oil-free scroll air end is based on the product within 12 months after the completion of installation and commissioning at the first job-site or within 12 months from the date of delivery from the Hanbell

- ,
-
-

操作手册

.

1 5
1.1 5
1.2 5
1.3 5
1.4 7
1.5 7
2 7
2.1 7
2.2 7
2.3 7
2.4 8
3 9
3.1 9
3.2 9
3.3 9
3.4 10
4 11
4.1 11
4.2 11
4.3 11
4.4 11
4.5 12
4.6 12
4.7 15
5 16
. 17

HANBELL

HANBELL

1

1.1

SAM-285 SAM-440 SAM-700

SAM-440-08 SAM 440 L/min 08

bar.g

S/N

1.2

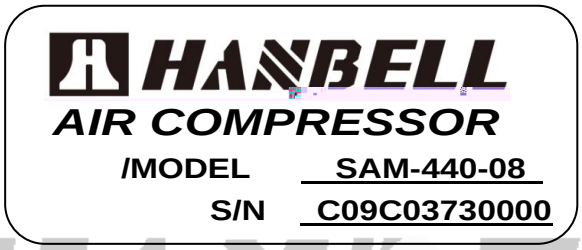

1.3

1.3.1

A.

B.

C.

1.3.2

A.

-
-
-

B.

:

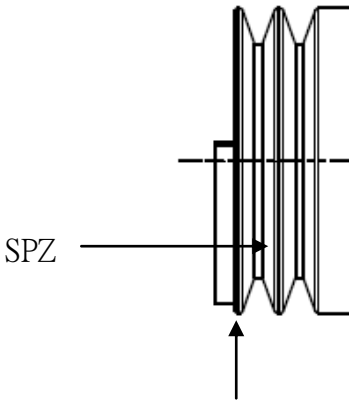

- V DIN7753 PART1 / ISO 4184
- ISO 1940-G6.3 VDI2060-Q6.3 ISO 8821 “ ” DIN 2211 GB/T 13575.1-2008
- 50.9~58Hz 360 20N
- 0.5
- 180
- 0.02mm
-
-

C.

0.2m

15m 0~40

50%

6

1.4

SAM “ ”

1.5

2

2.1.

2.2.

- GB/T 6388
- GB/T 13384
- GB/T 3853
- GB/T 15847
- JB 8524
- GB/T 7777
- GB/T 4980
- JB/T 6441

2.3.

2.4.

-
- “ ” “ ”
-
-
-
-
- “ ”
  -
  -
  -
  -

3

3.1

3HP　30HP

1

SAM-440

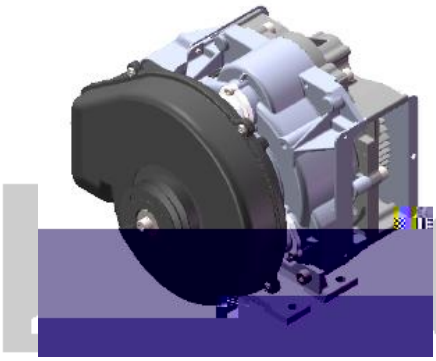

SAM-700

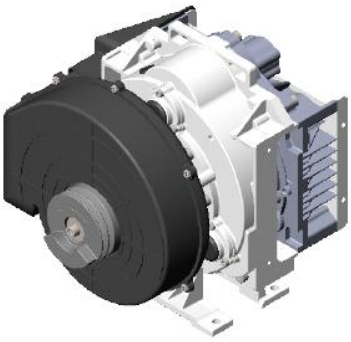

3.2

3.3

2

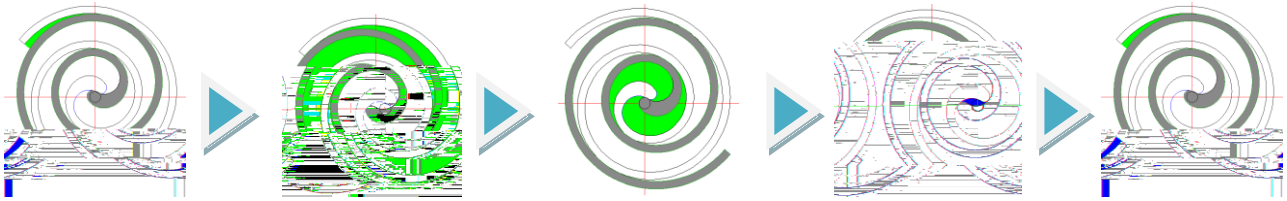

3.4 Oil-free scroll air end technical data

Model	Shaft power	Rated pressure	Air displacement	Exhaust interface	Speed	Noise value	Outline size	Weight
	KW	Mpa	L/min	inch	r/min	dB(A)	mm	kg
SAM-285	2.2	0.8	250	PT3/8"	2840	64	270x300x265	15.5
	2.4	1.0	215		2400			
SAM-440	3.75	0.8	410	PT1/2"	3050	65	347x330x295	19.5
	4.4	1.0	355		3000			
SAM-700	5.5	0.8	570	PT3/4"	2950	66	335x381x357	31.5
	6.0	1.0	490		2650			

HANBELL

4.

4.1

1 5% 3%

2

3 600

KW	1.1~1.5	3.7~5.5	11~15	22~30
MM²	2~2.5	4	6~10	25

4 100

4.2

1

2 0 40

3 0.6

4

4.3

1

2

3

4

4.4

1

2

3

4

5

6

7 1~2s

8

9

10

11

4.5

1

2 0MPa

3 0MPa

4

HANBELL

4.6

1

2

3

4

1 GB/T14295-2019 99%

500 1500~2500

HANBELL

2

3

4

5

1

2

3 3000 3

5000

4

5 30

0.8MPa

+45

		500 2	2500	5000 2	10000 4	15000 6	20000 8	
								3500h
								2500h
								6

1.0 MPa

+50

		500 2	2500	5000 2	10000 4	15000 6	20000 8	
								2500h
								2500h
								2500h
								6

HANBELL

HANBELL

4.7

	1. 2. 3. 4. 5. 6. 7. 8.	1. 2. 3. 4. 5. 6. 7. 8.
	1. 2. 3. 4. 5.	1. 2. 3. 4. 5.
	1. 2. 3. 4.	1. 2. 3. 4.
	1. 2. 3. 4.	1. 2. 3. 4.
	1. 2. 3. 4. 5. 6.	1. 2. 3. 4. 5. 6.
	1 2 3	1 2 3

HANBELL

HANBELL

1

a.

b.

c.

2

a.

b.

c.

3

a.

b.

c.

4

HANBELL

5

➢

➢

➢

➢

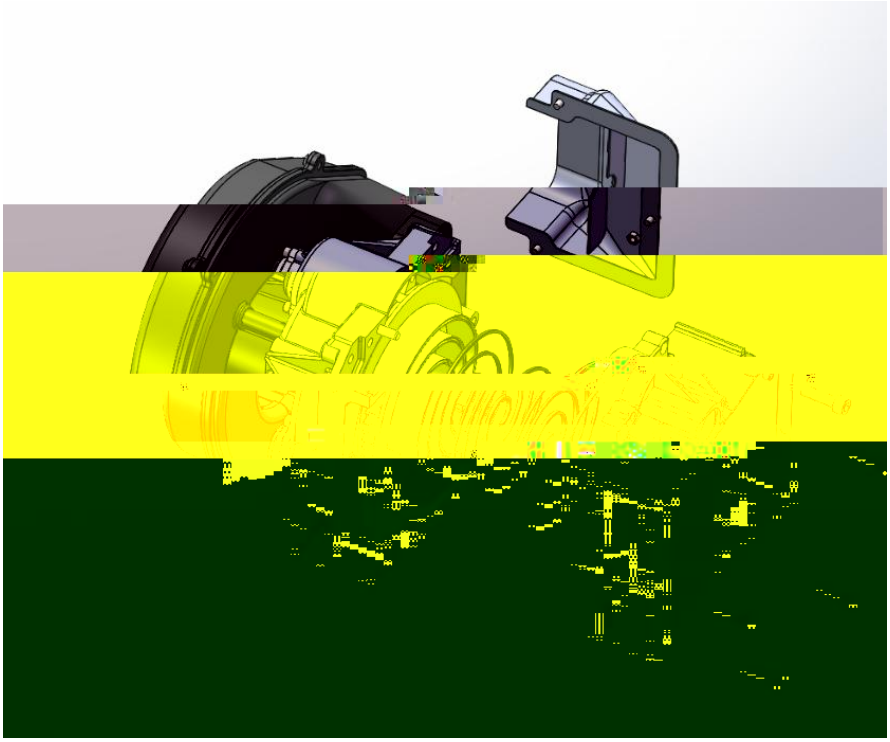

:400-770-2158

Tel:021-5735-0280
Fax:021-5136-8588